The TS2040 PRINTER

The TS2040 printer, manufactured by Alphacom, prints 32 characters per line on special heat sensitive paper at a horizontal density of 10 cpi and a vertical density of 8.275 cpi, and a speed of 2 character lines per second. Each character is formed by an 8x8 dot matrix. The 32-character line is printed as 8 consecutive bit lines of 8 x 32 = 256 bits per line.

The bits are transmitted in serial form through data line D7. Special electronics distribute the signal according to an internal timing to the proper one of 8 x 32 = 256 print heads.

After a bit line is printed, a motor advances the paper by one bit (1/66.2").

The port selection circuitry, consisting of an SN74LS10N, is contained in the connector which is basically a feedthrough type with the female side connected to the computer and the male side for additional interfacing.

The address lines A2 and A7, and the IORQ line are tapped. They go to the selector which gives a signal in the printer when A7 is high, and A2 and IORQ are low. In addition, data lines D0, D2, D6, D7 and signal lines WR and RD are tapped. These six lines and the selection line are brought to the printer in a shielded cable.

The power for the selector chip, contained in the connector, is provided by the computer. By selecting a chip of the LS-line the power drain and thereby the heating is kept very low.

The printer obtains about 25 volts from the power supply. In standby mode it consumes about 0.13 Amperes; and in printing mode about 0.21 Amperes. An internal rectifier provides the power for the electronic circuitry.

When the printer is not connected, all 8 data lines are high (FF). Upon connection D7 is pulled low (7F). When the power comes on, D2 and D6 are also pulled low (3B). (This connection of D2 in the Read mode is not shown in the Timex 2068 Technical Manual). As long as the printer is busy printing a bit, D0 is also low (3A).

After the whole bit line is printed D0, D2, D6 are pulled low (BA).

To start printing, an output command OUT (FB),A with D2 low (i.e. A=00) has to get the motor ready.

Each time a bit is to be transferred , an IN A, (FB) command has to test D6. When it is low, the next bit can be transmitted through D7 by OUT (FB), A. (Where A is either 0C or A0h, according to whether a space or a dot has to be printed.).

After all the required printing is done, the motor has to be stopped by outputting 0A to port 7B. If this is not done, an additional dot line is printed.

No motor speed change, as indicated in the Timex 2068 Technical manual, could be detected.

It is essential to disable the interrupt during the printing process since otherwise the always-present display interrupts will disturb the print flow, provided by the internal timing.

T/S 2040 PRINTER SCHEMATIC - $.50

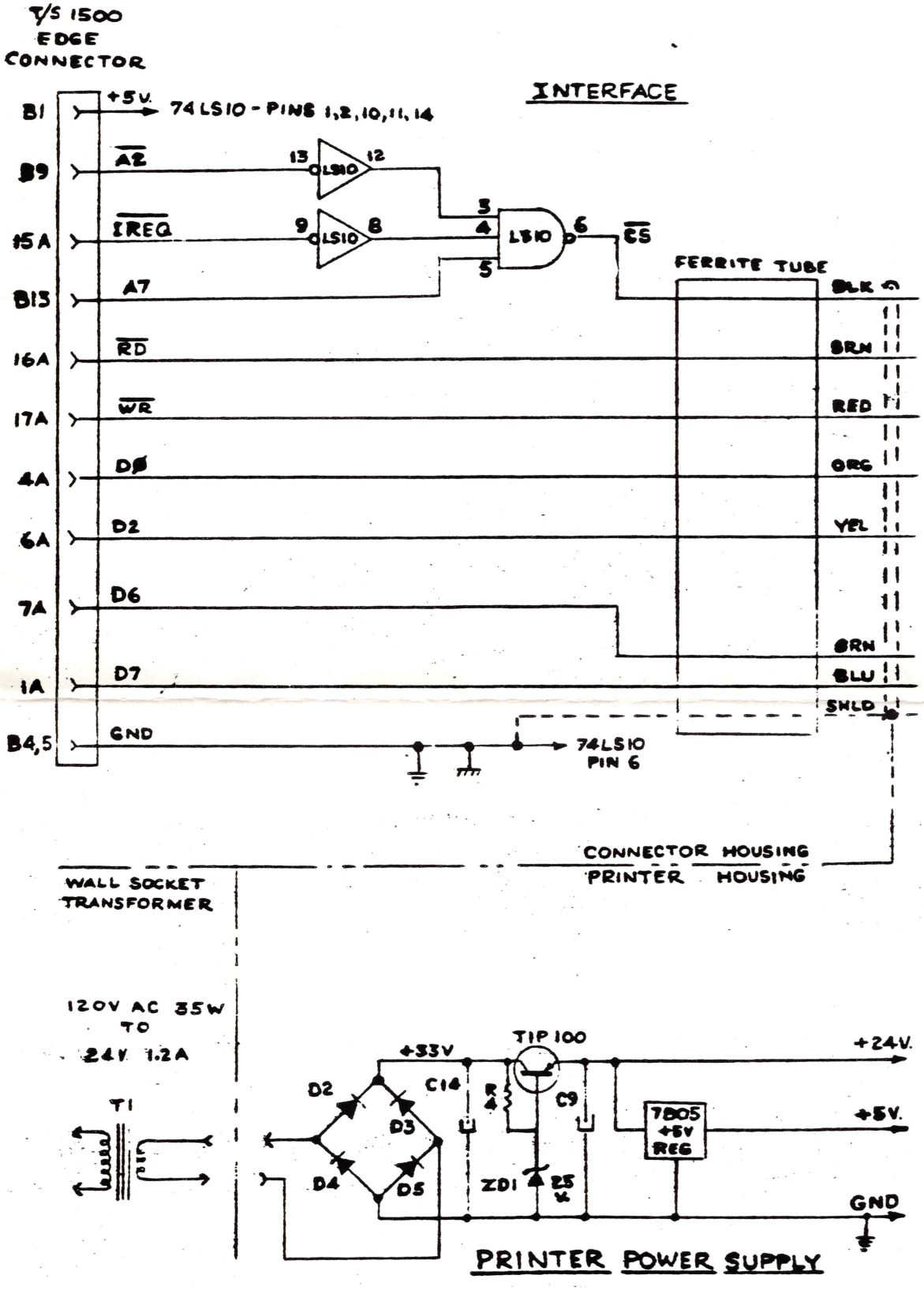

FIGURE 10-5 T/S 2040 PRINTER

TRACED BY JIM LEVEY
84Ø5Ø9D
BT8OB ORRFELT
SHEET 1 OF 2

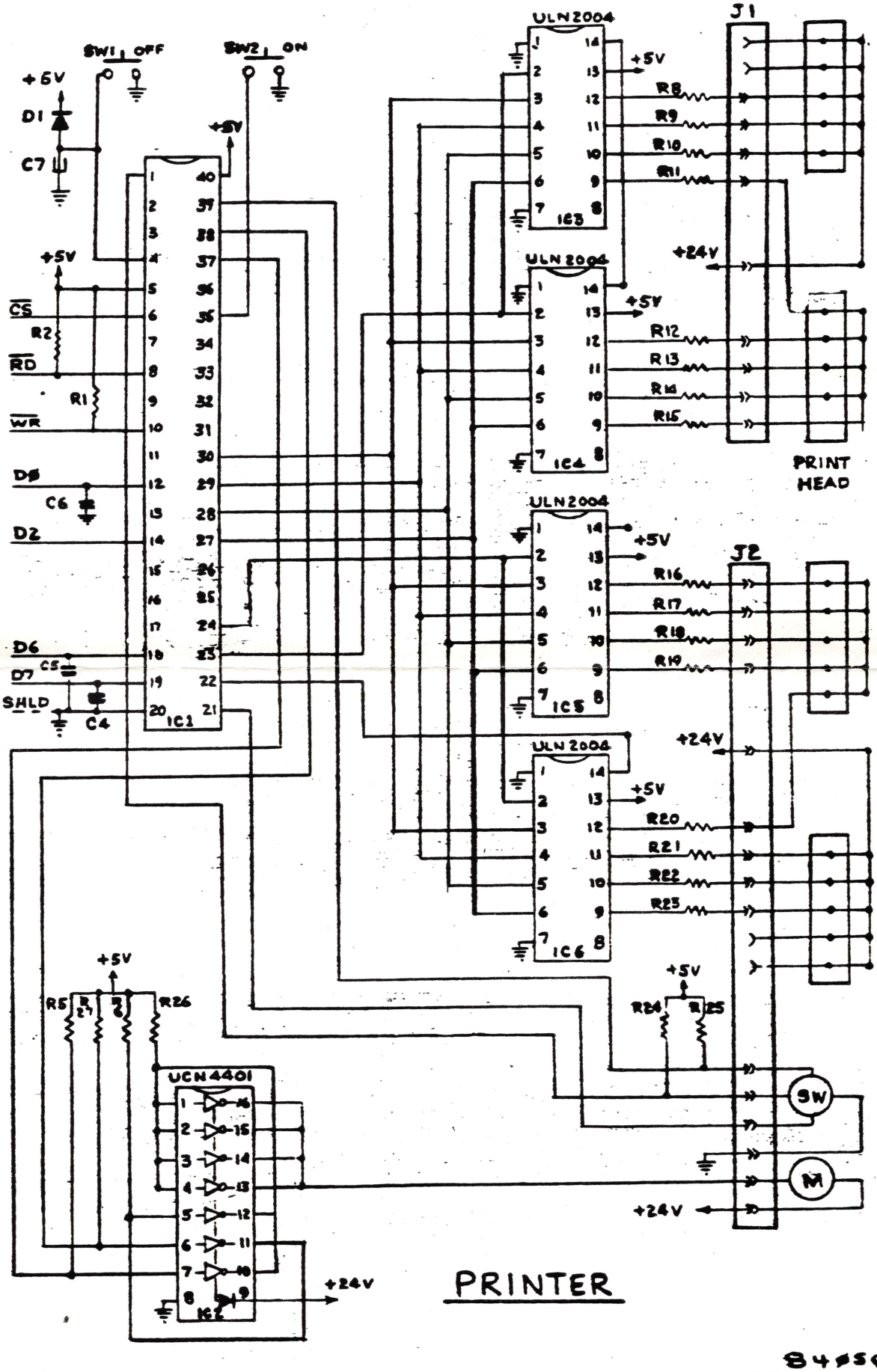

8455090
TS 2040 PRINTER
SCHEMATIC
BY BOB ORRFELT
SHT 2